Use the tabs above to navigate

THE WOOD WHISPERER™

EDUCATION AND ENTERTAINMENT FOR THE MODERN WOODWORKER

# Project Plan

# Steamer Trunk Lid Details

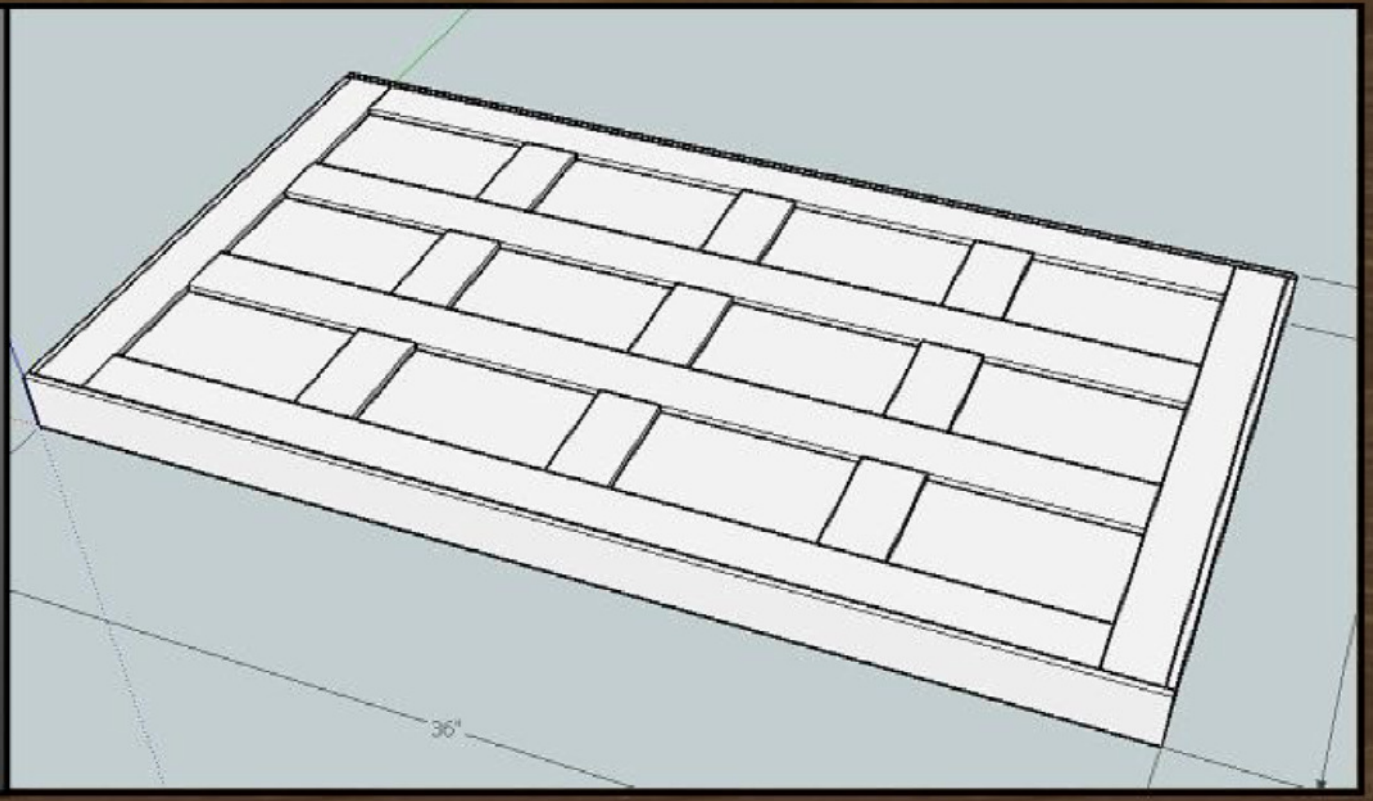


SketchUp by Aaron Marshall – Feb 7, 2009

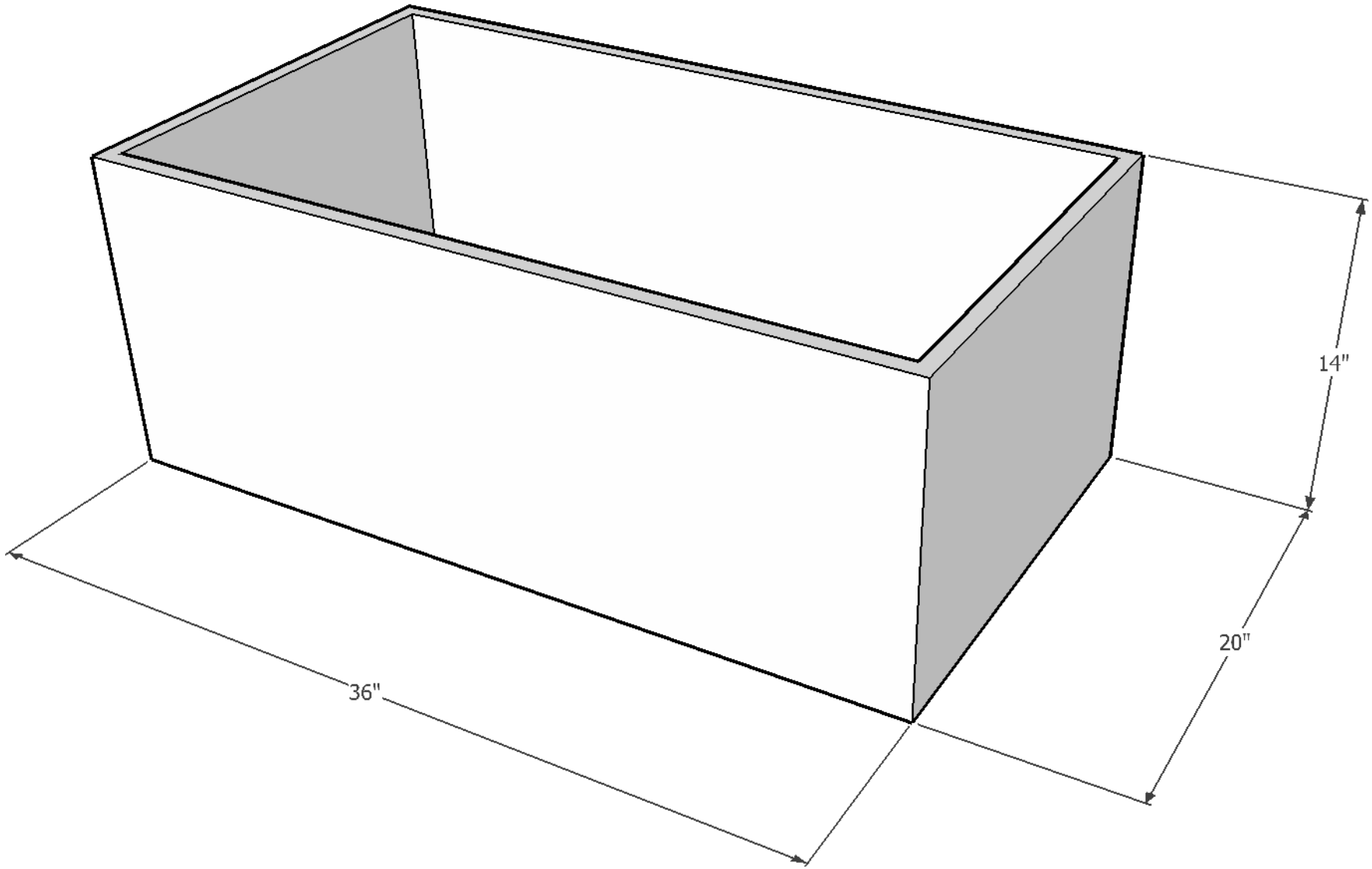
14"
20"
36"

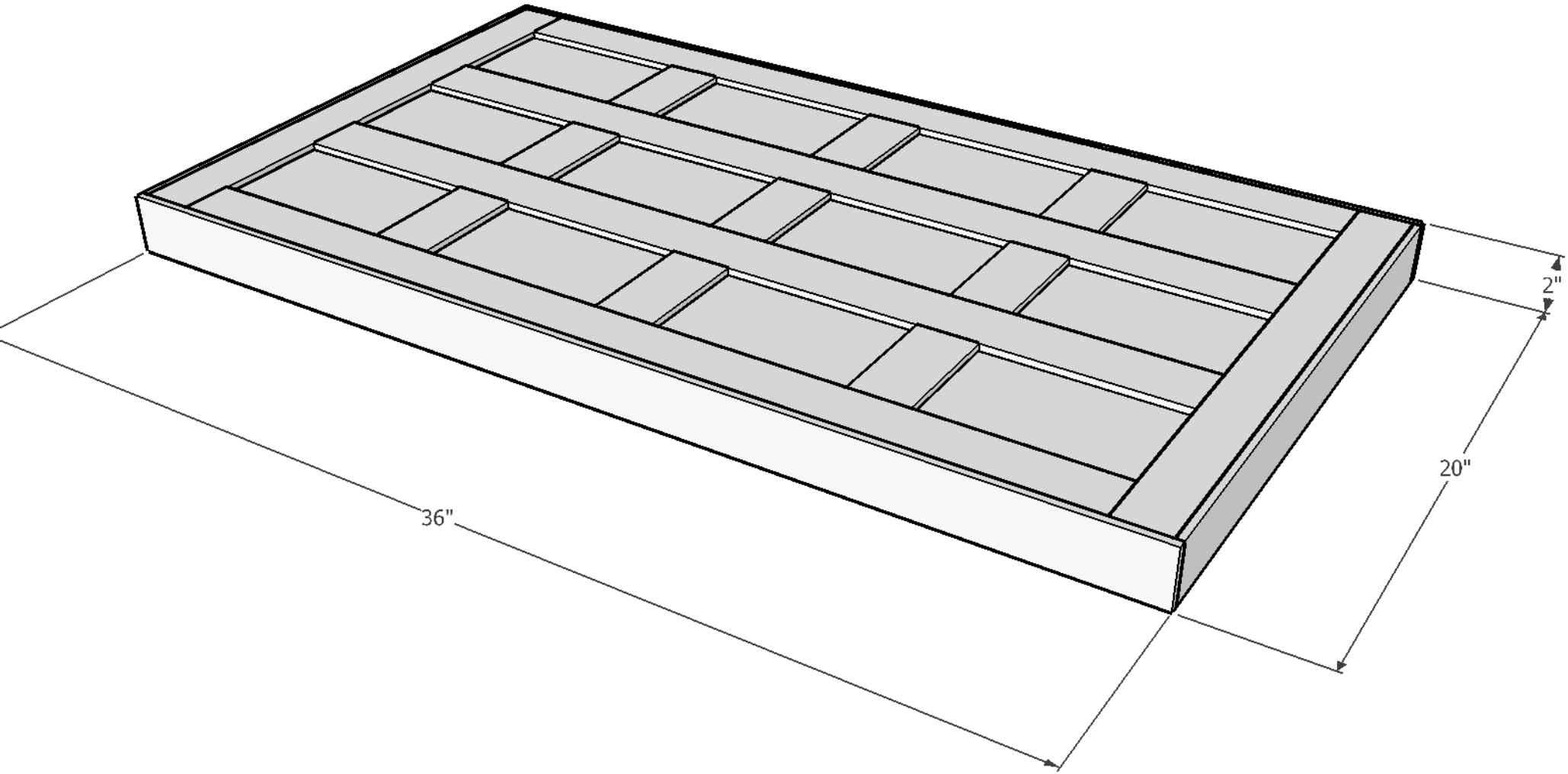
2"
20"
36"

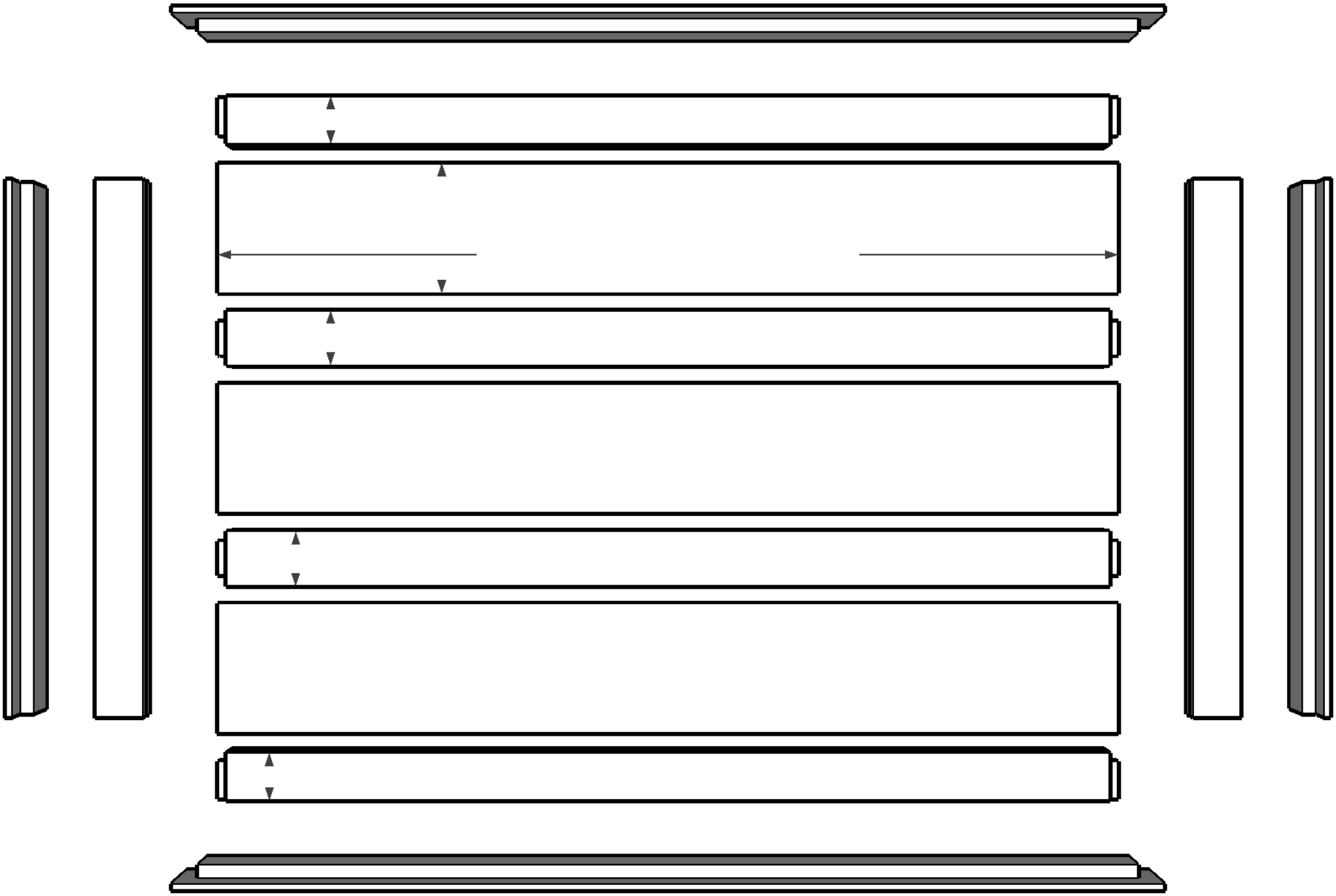

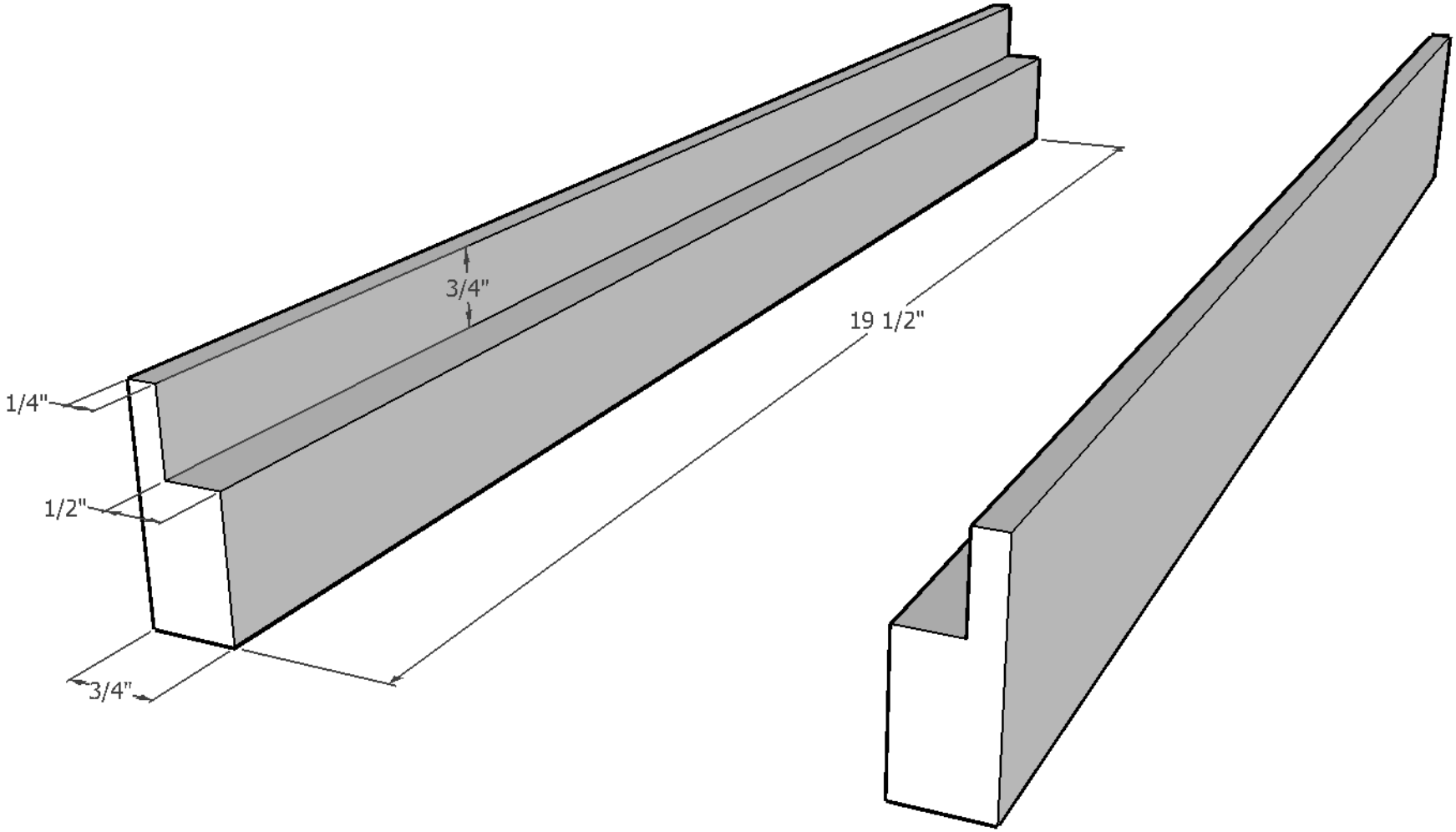
3/4"
19 1/2"
1/4"
1/2"
3/4"

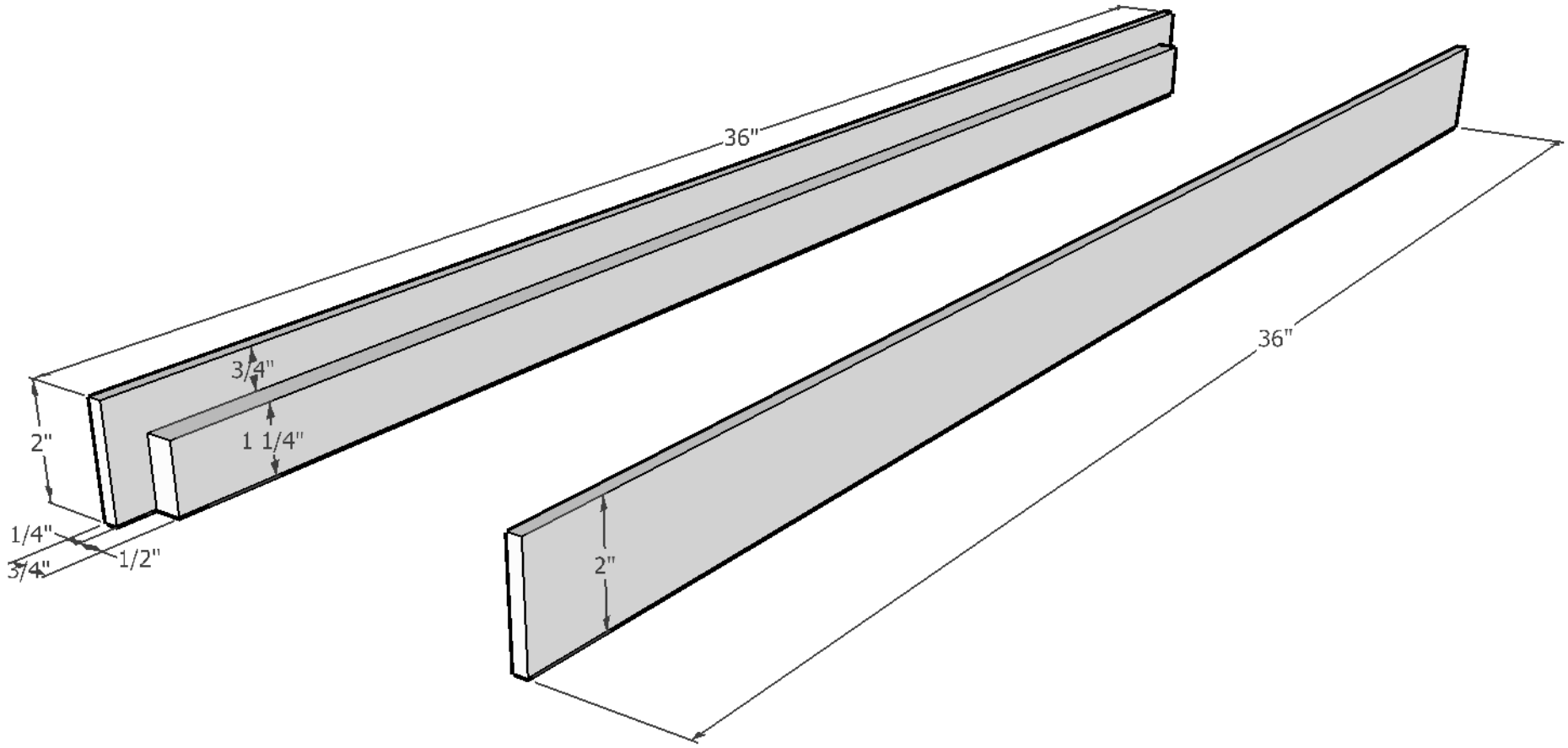
36"
3/4"
1 1/4"
2"
1/4"
1/2"
3/4"
36"
2"

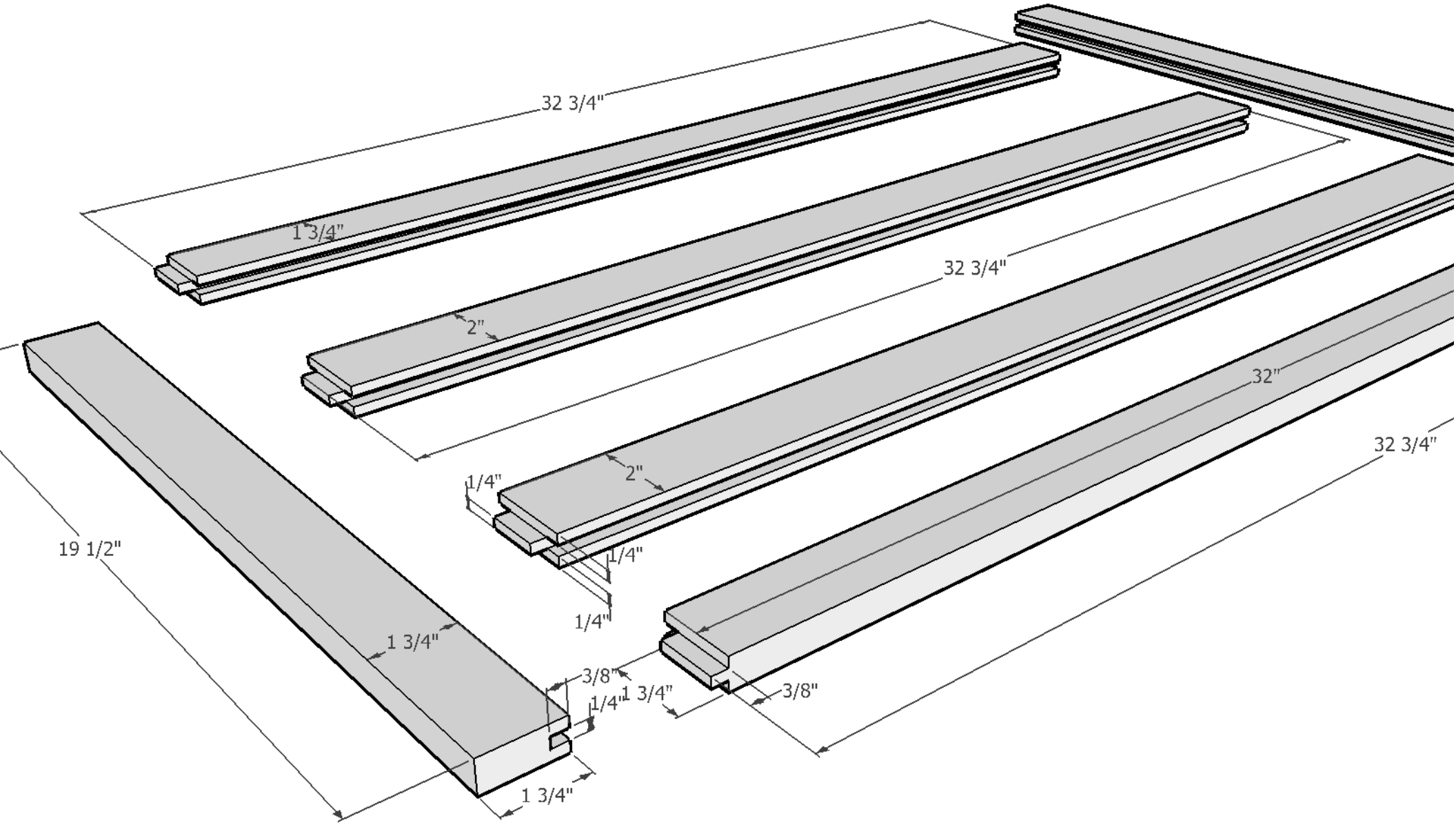
32 3/4"
1 3/4"
32 3/4"
2"
32"
32 3/4"
2"
1/4"
1/4"
1/4"
19 1/2"
1 3/4"
3/8"
1 3/4"
1/4"
3/8"
1 3/4"

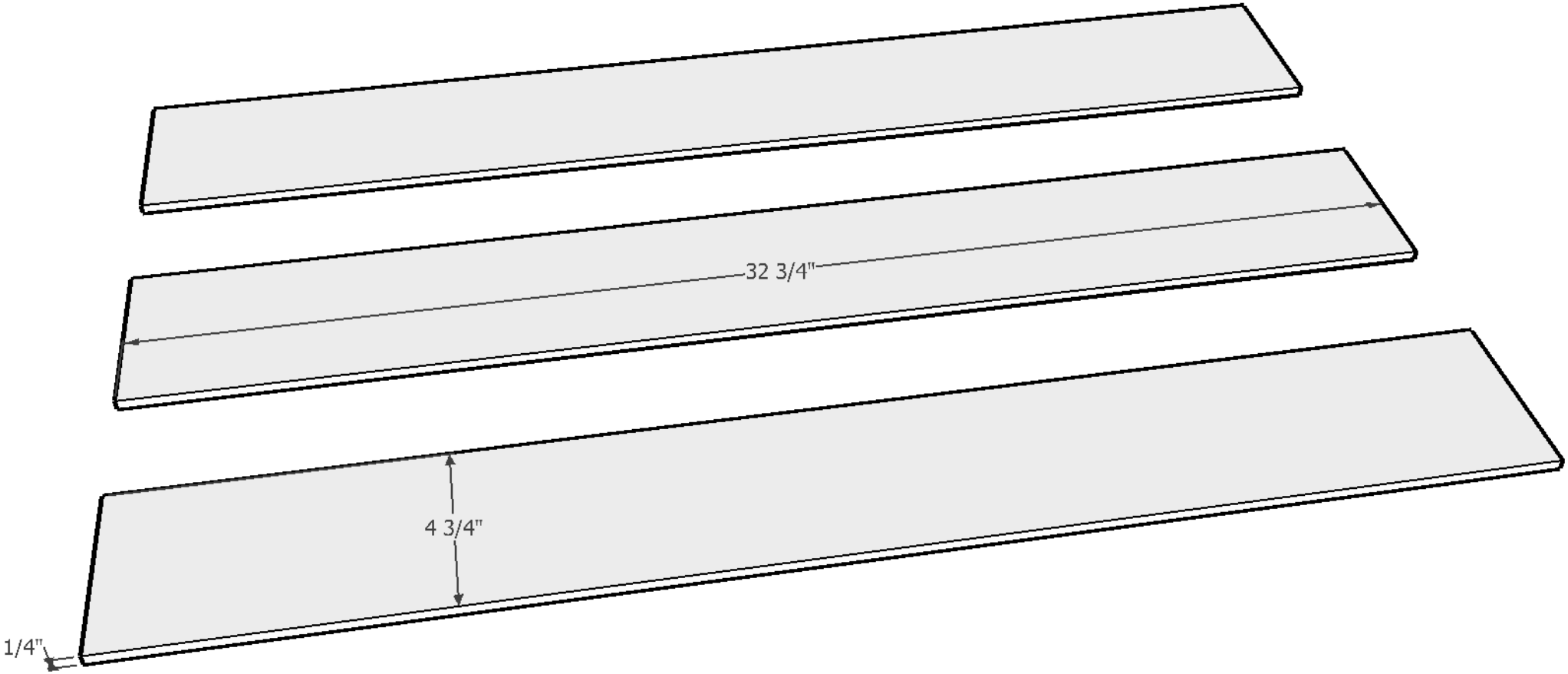
32 3/4"
4 3/4"
1/4"

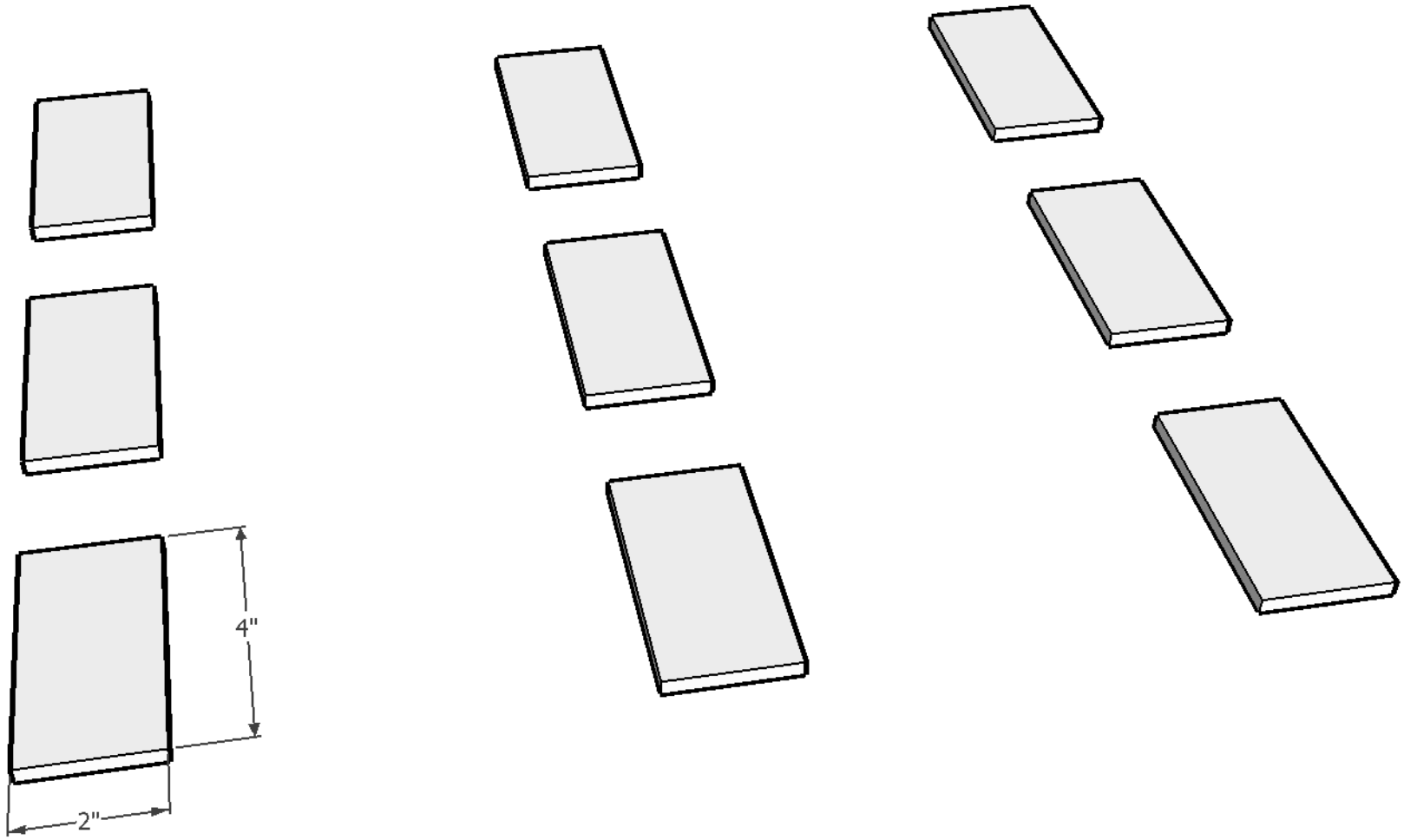
4"
2"